PowerHub.100

CONSTANT VOLTAGE DRIVERS

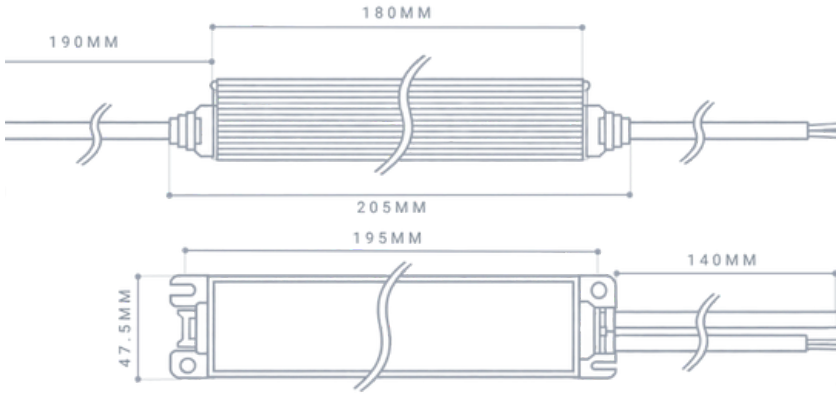

OUTPUT VOLTAGE	24Vdc
OUTPUT POWER	100W
STROBE LEVEL	No Flicker
DIMMING RANGE	0 - 100%
PWM DIMMING FREQUENCY	>3600K
DIMMING INTERFACE	TRIAC Leading Edge / 0 - 10V / 1 - 10V
INPUT VOLTAGE RANGE	200 - 250Vac
FREQUENCY	50 / 60Hz
INPUT CURRENT	<1A
EFFICIENCY	88%
IN-RUSH CURRENT	Cold Start 70A
ANTI-SURGE	L-N: 2kV
LEAKAGE CURRENT	<0.5mA / 230Vac
WORKING TEMPERATURE	45°C - 85°C
IP	IP42
OVER-CURRENT PROTECTION	Shut Down >102%
SHORT-CIRCUIT PROTECTION	Shut Down Short Circuit

Have a technical question? Get in touch!

office@lightingoflondon.co
@lightingoflondon
02071 139 5129